Rio RH 1100x900

Note: Drain position central unless dimensioned otherwise

# Step Entry

SKU: LQ-RIO-RH-ST

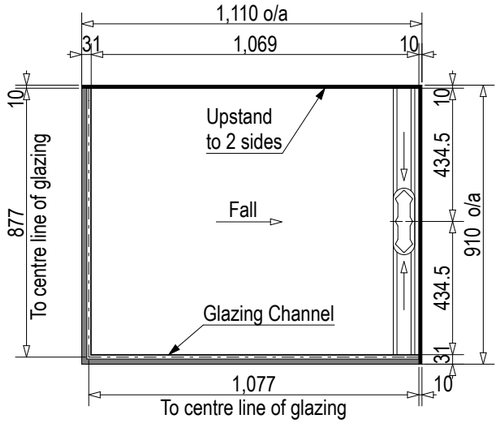


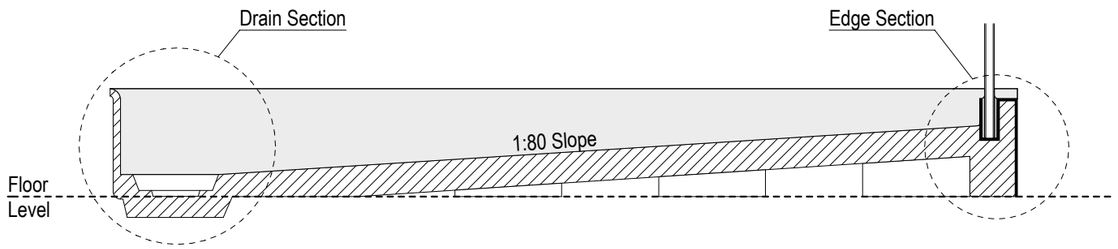


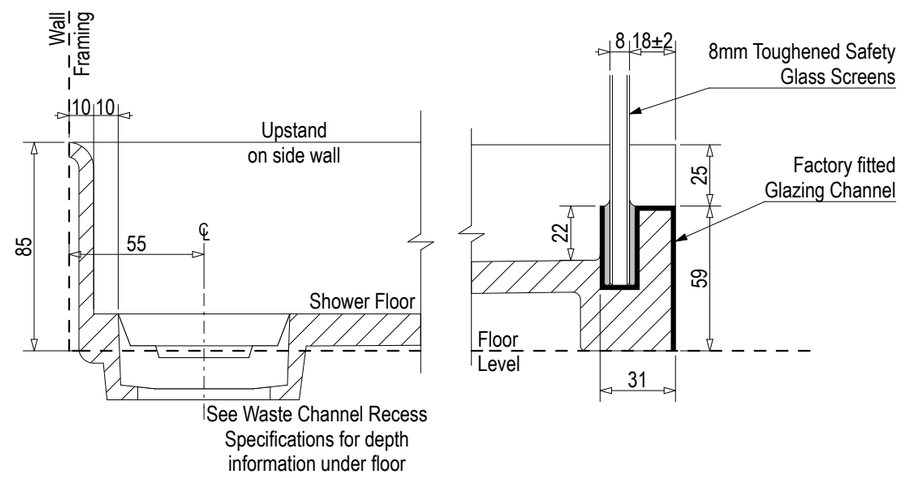


# Level Entry

SKU: LQ-RIO-RH-LE

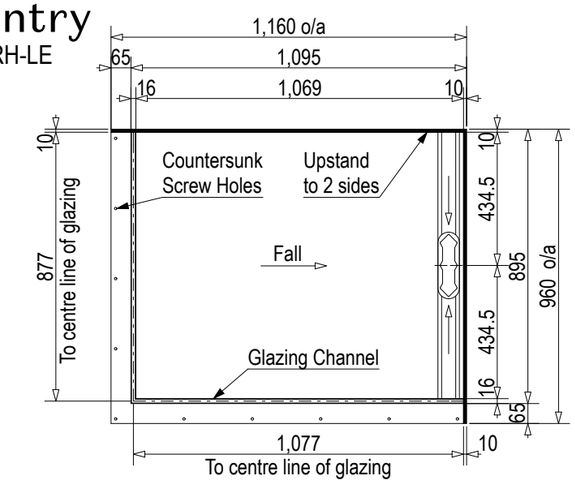


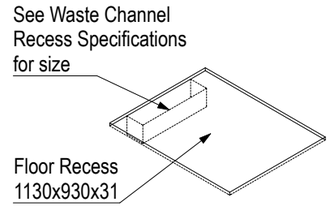


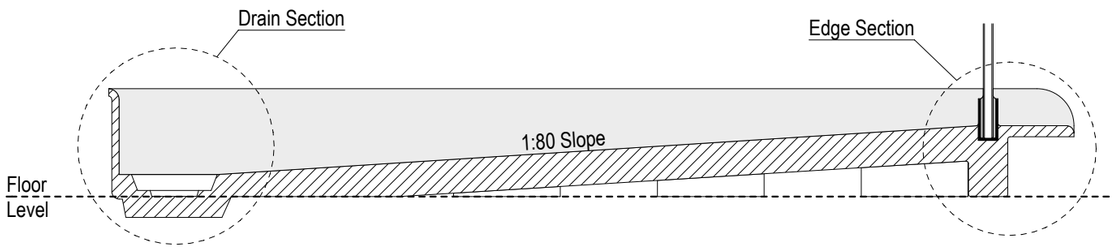


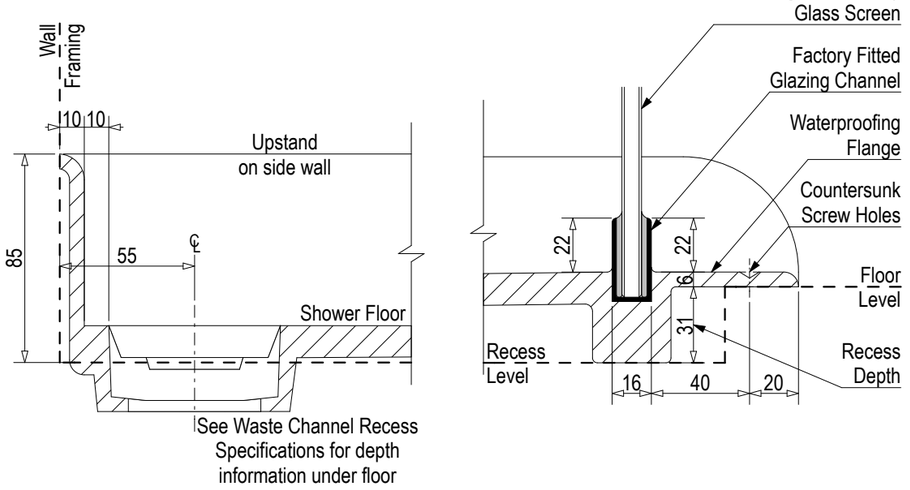


Note: Verify exact shower base dimensions on site

## Screen Options:

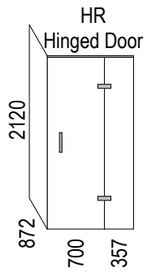

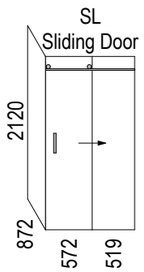


For more product information go to:
www.atlantis.co.nz/shop/linea-quattro/rio-1100x900/

For installation instructions go to:
www.atlantis.co.nz/trade/installation/

linea quattro

atlantis

## AQUAPLANE WASTE FITTING

- EasyClean Waste with in-built trap
- 50L/min ultra flow rate
- Removable fin for easy cleaning
- 40/50mm outlet with swivel fitting
- Components bolt together for guaranteed watertightness

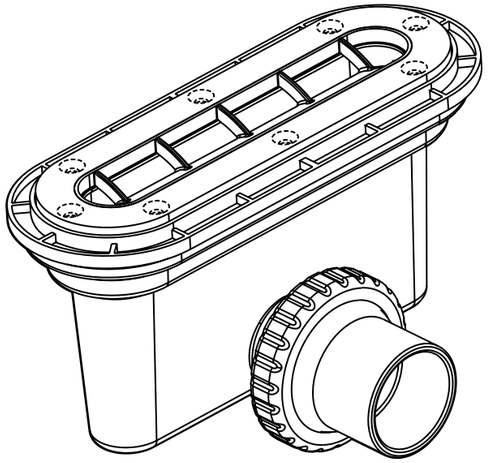

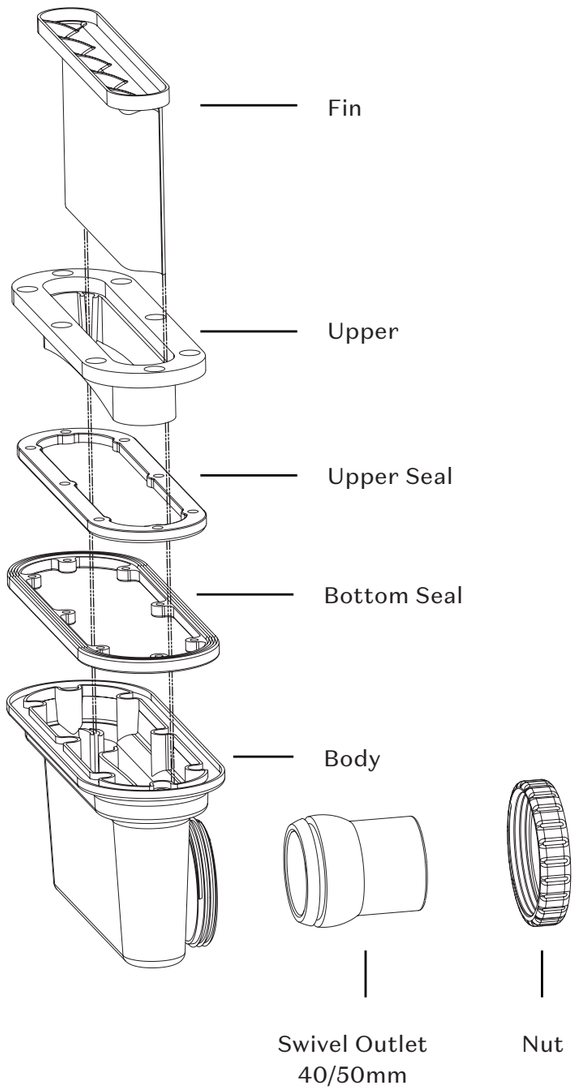


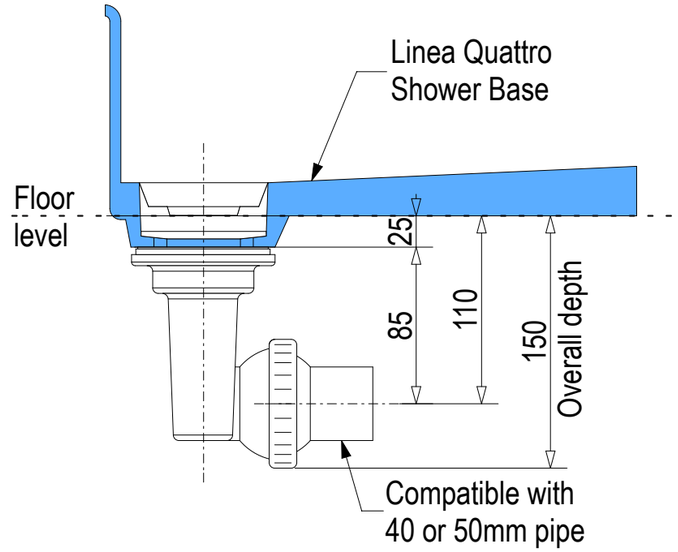


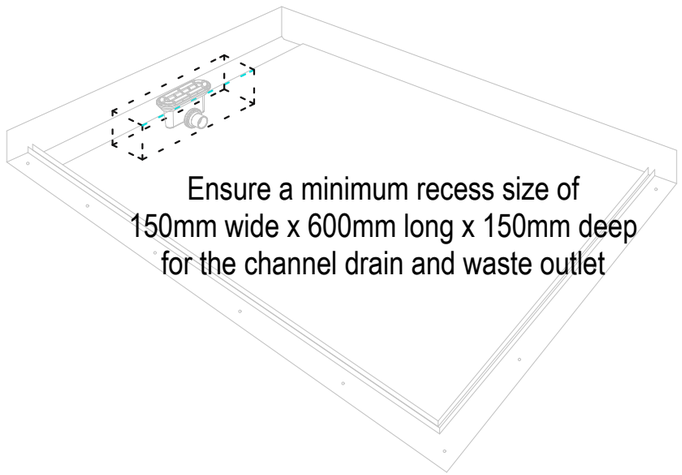

# Base Profile 1 - Level Entry (Concrete Floor)

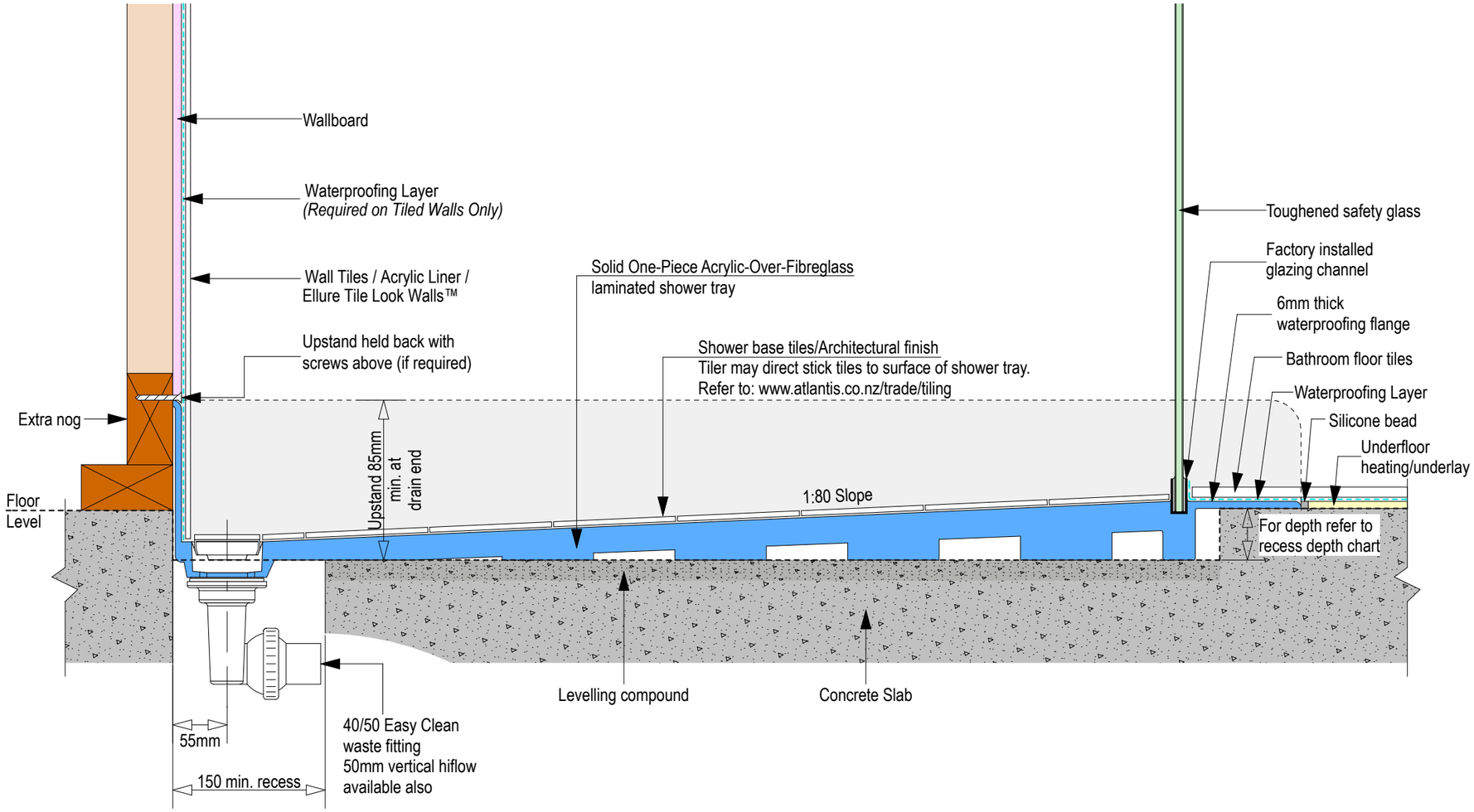


linea quattro

atlantis

Linea Quattro

Base Profile 2 - Level Entry (Timber Floor)

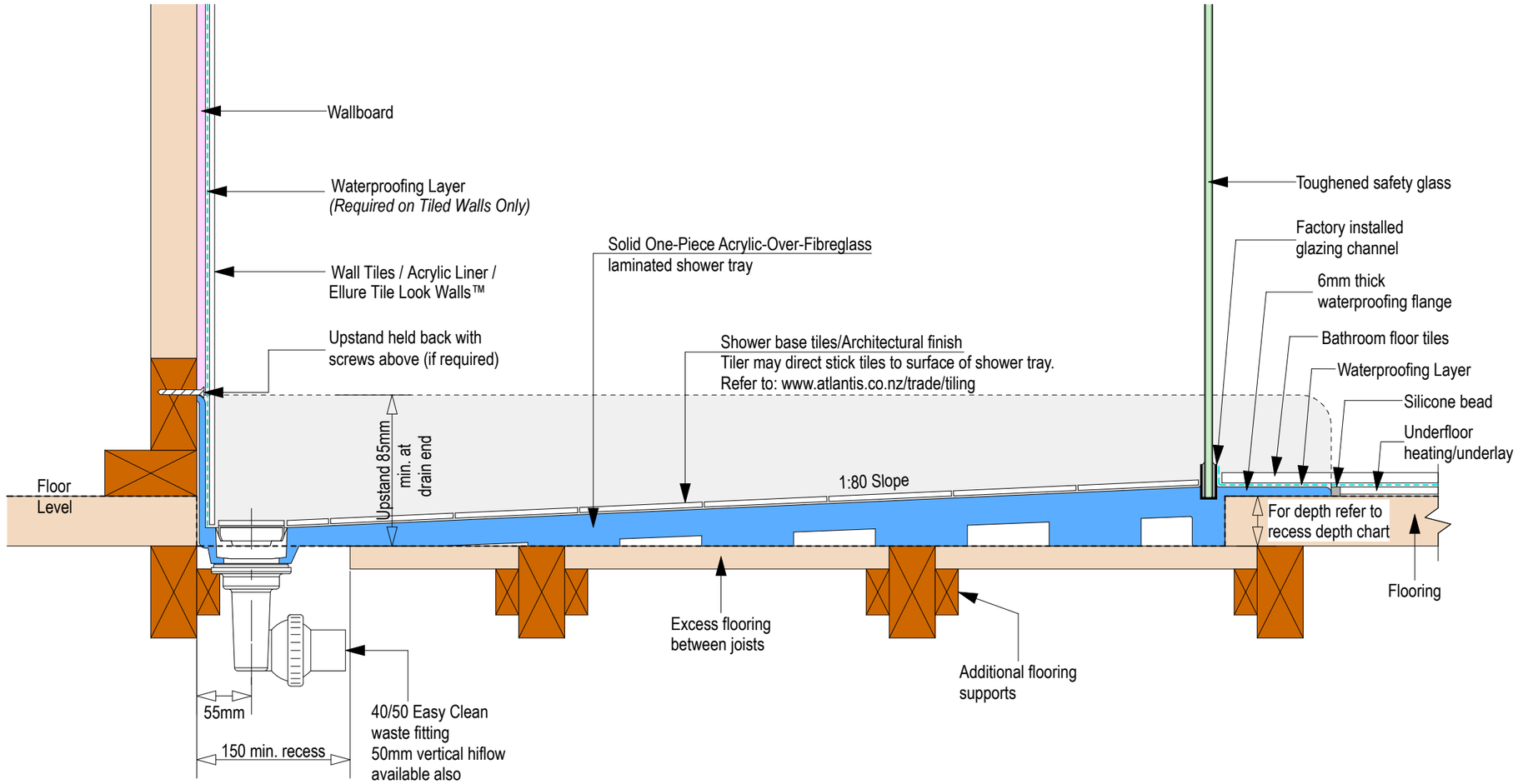


linea quattro

atlantis

Linea Quattro

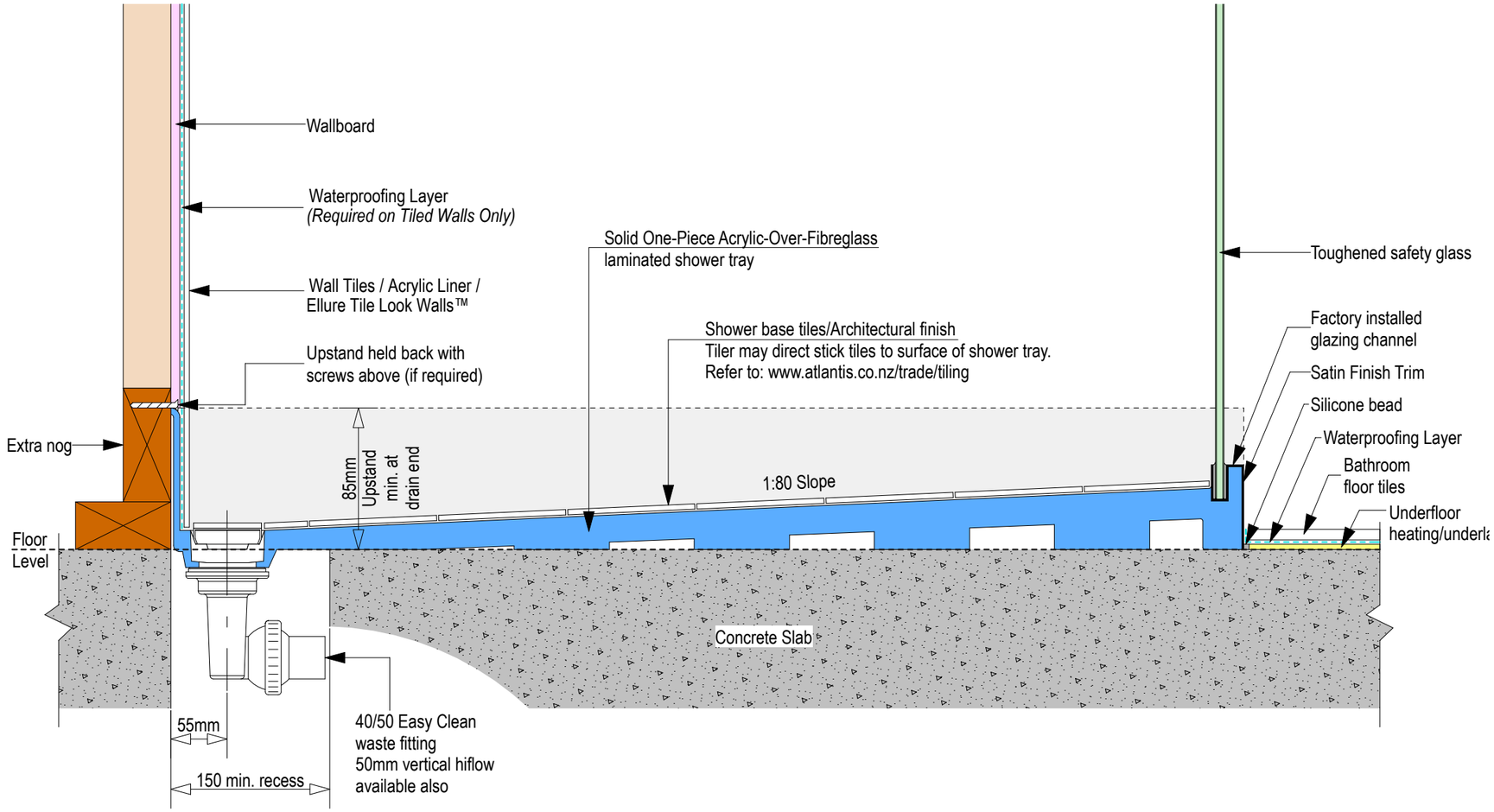
Wallboard
Waterproofing Layer
(Required on Tiled Walls Only)
Wall Tiles / Acrylic Liner /
Ellure Tile Look Walls™
Upstand held back with
screws above (if required)
Extra nog
85mm
Upstand
min. at
drain end
Floor
Level
55mm
150 min. recess
40/50 Easy Clean
waste fitting
50mm vertical hiflow
available also
Solid One-Piece Acrylic-Over-Fibreglass
laminated shower tray
Shower base tiles/Architectural finish
Tiler may direct stick tiles to surface of shower tray.
Refer to: www.atlantis.co.nz/trade/tiling
1:80 Slope
Concrete Slab
Toughened safety glass
Factory installed
glazing channel
Satin Finish Trim
Silicone bead
Waterproofing Layer
Bathroom
floor tiles
Underfloor
heating/underla

Base Profile 4 - Step Entry (Timber Floor)

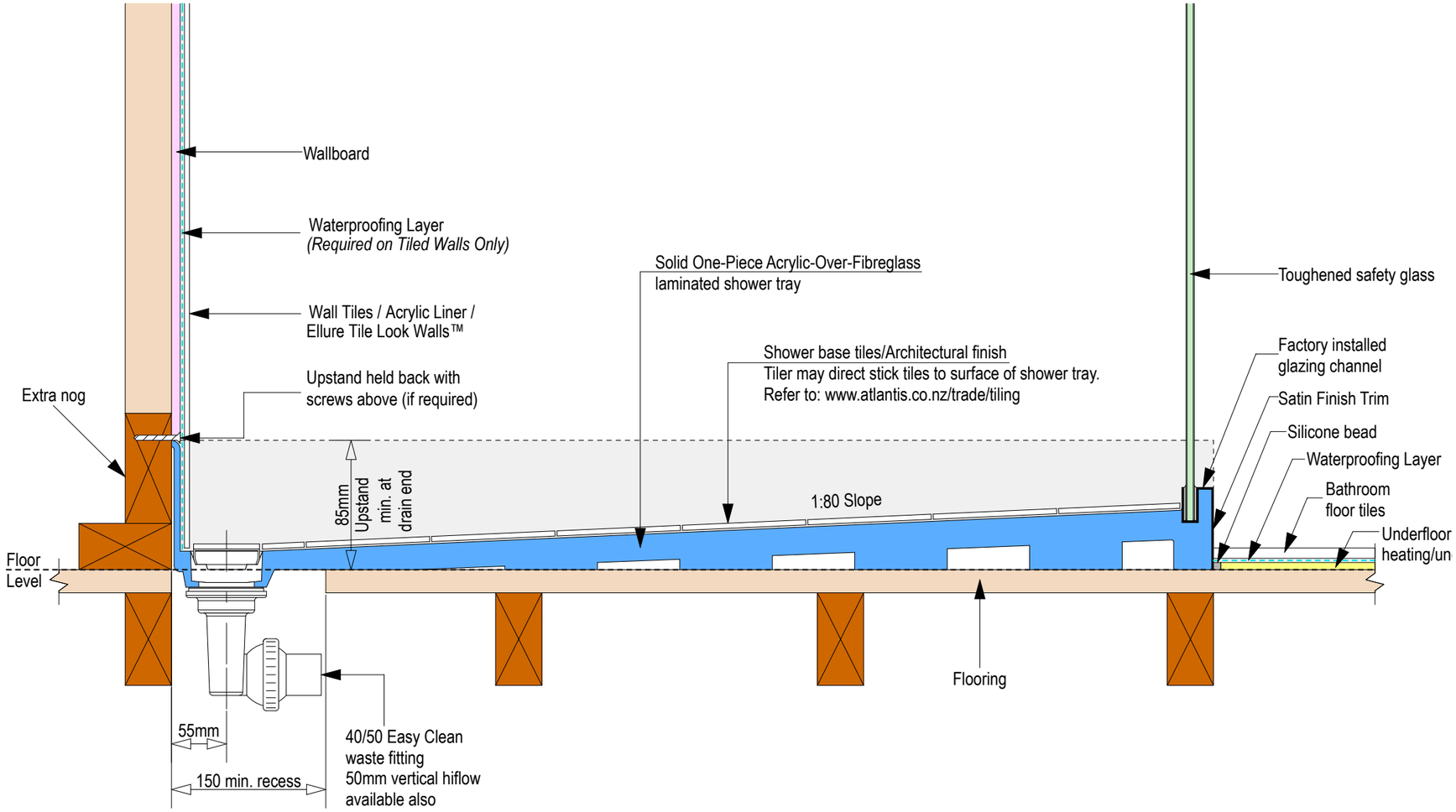


Linea Quattro

3D

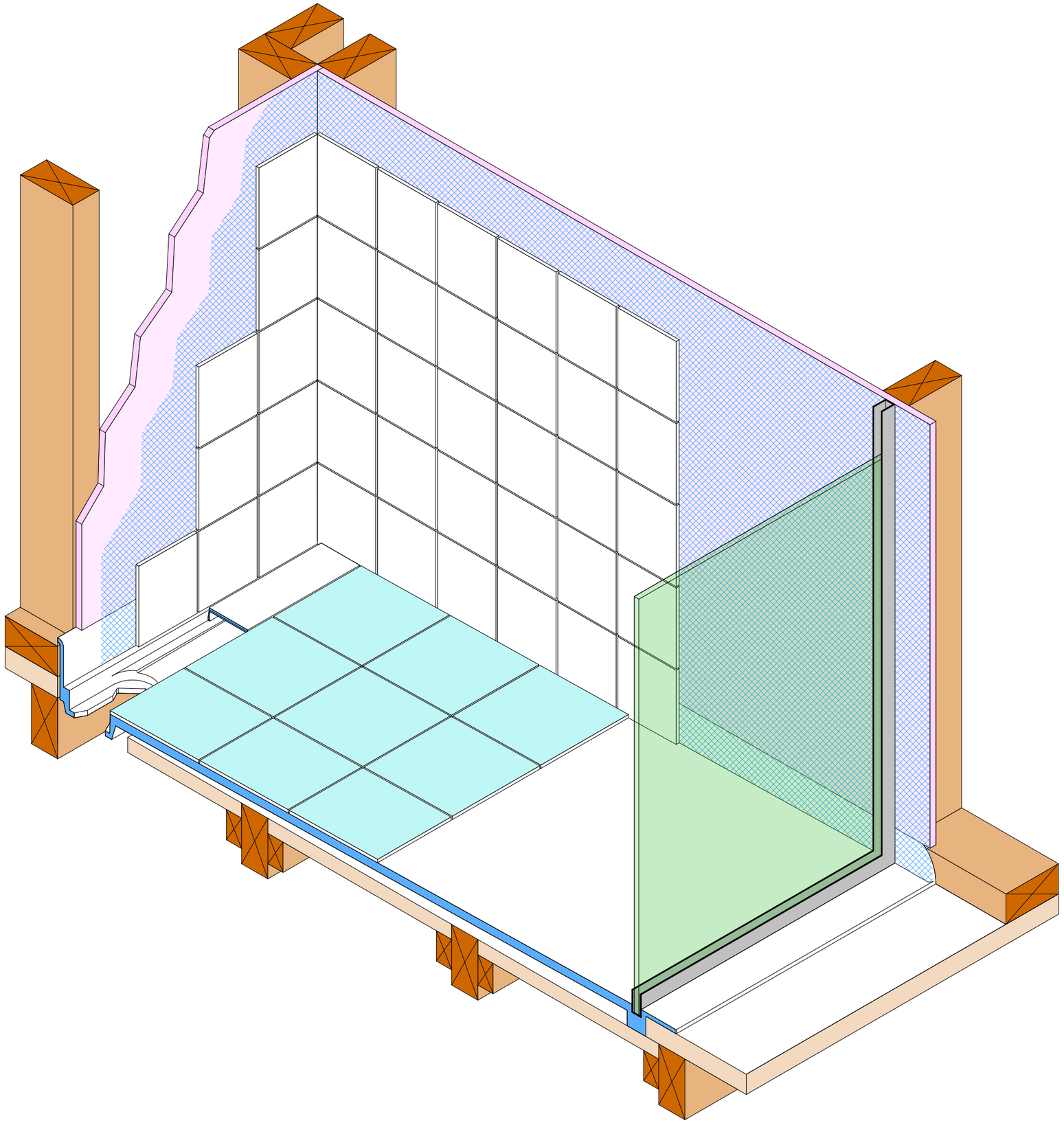

Linea Quattro