Bahamas 1200x900

BLACK PEARL™

Rear Drain

SKU: BP-BAH-RO

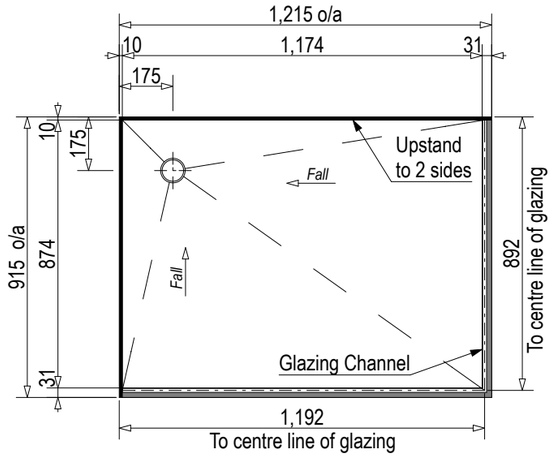

Centre Drain

SKU: BP-BAH-CO

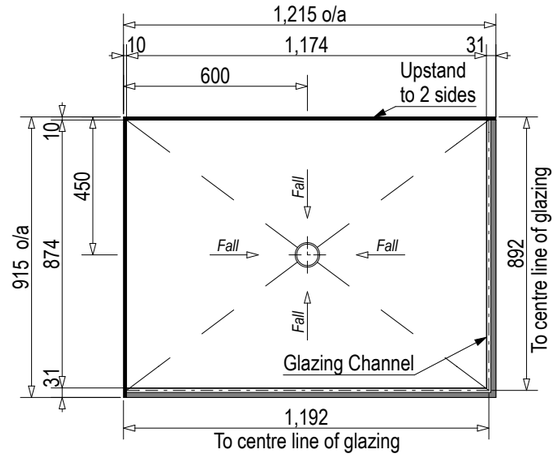

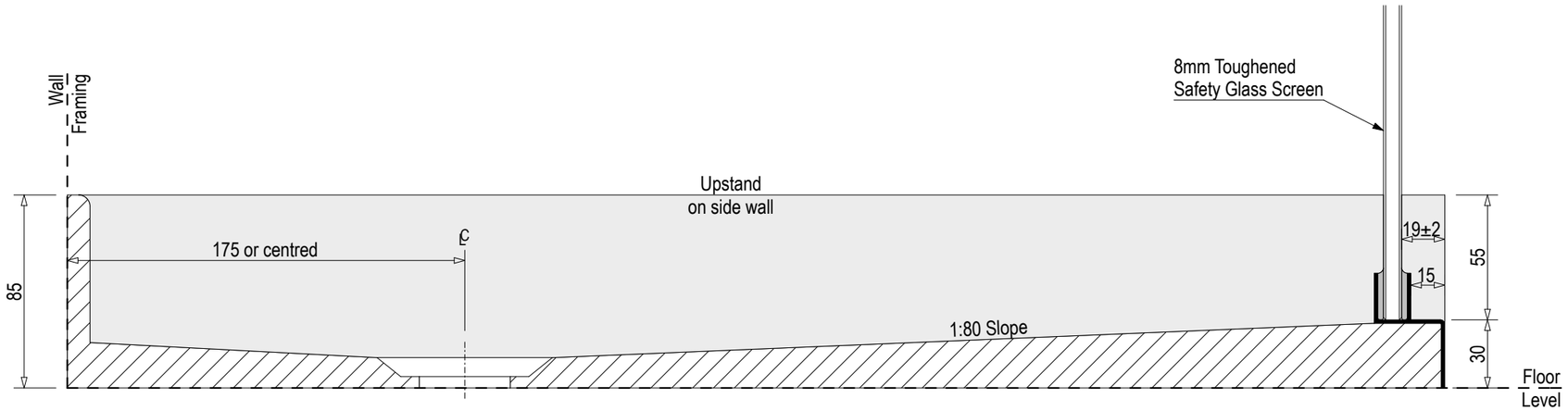

Note: Verify exact shower base dimensions on site

Screen Options:

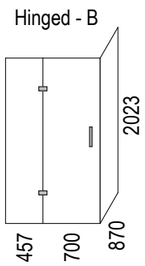

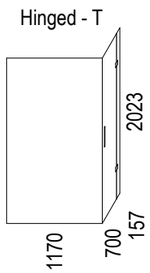

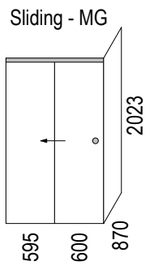

For more product information go to:
www.atlantis.co.nz/shop/black-pearl/bahamas-1200x900/

For installation instructions go to:
www.atlantis.co.nz/trade/installation/

atlantis

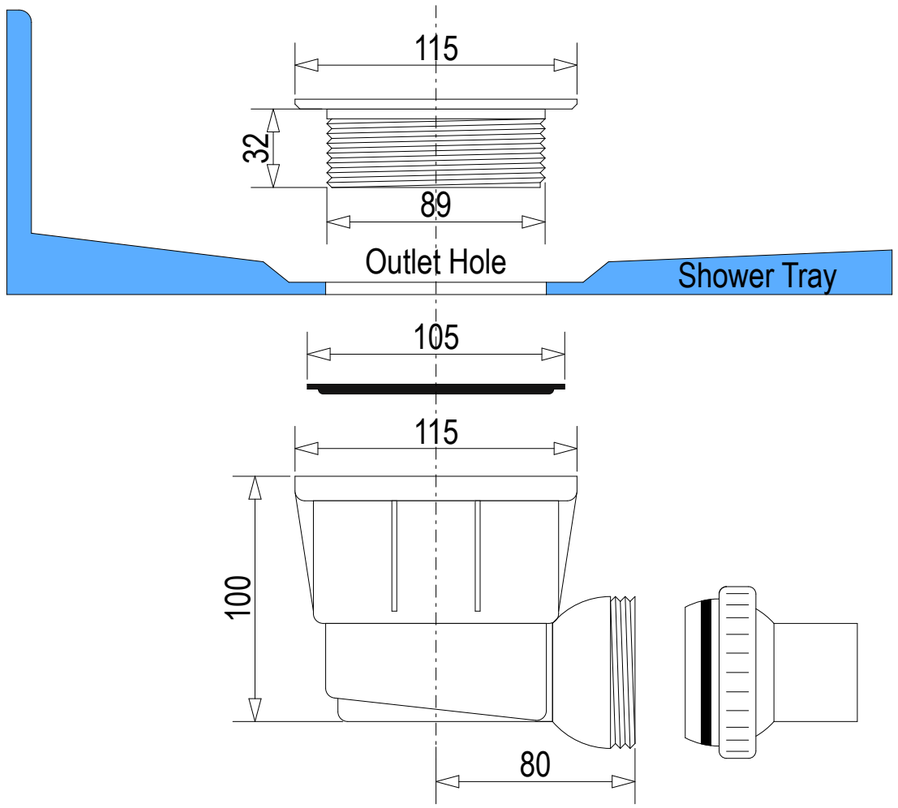

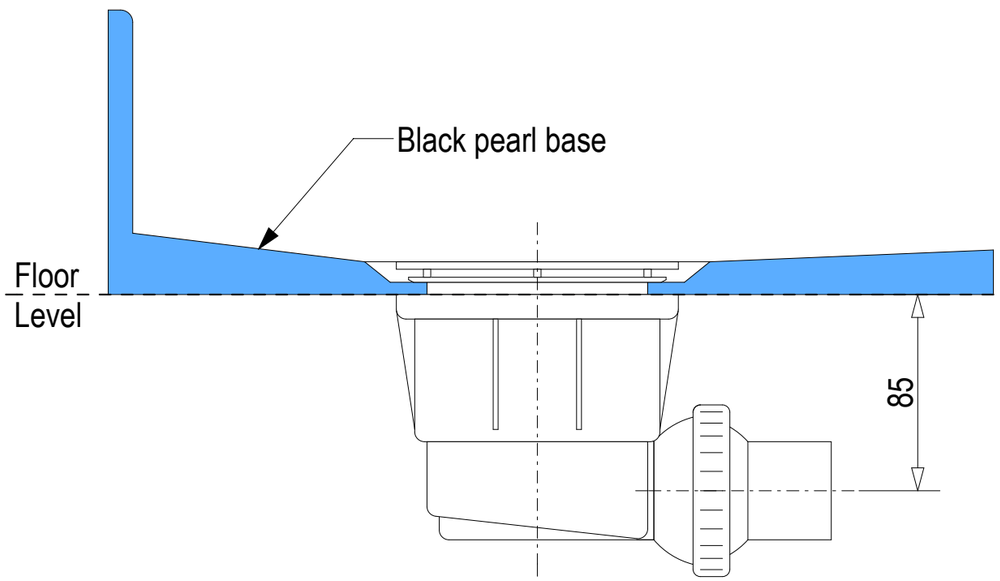

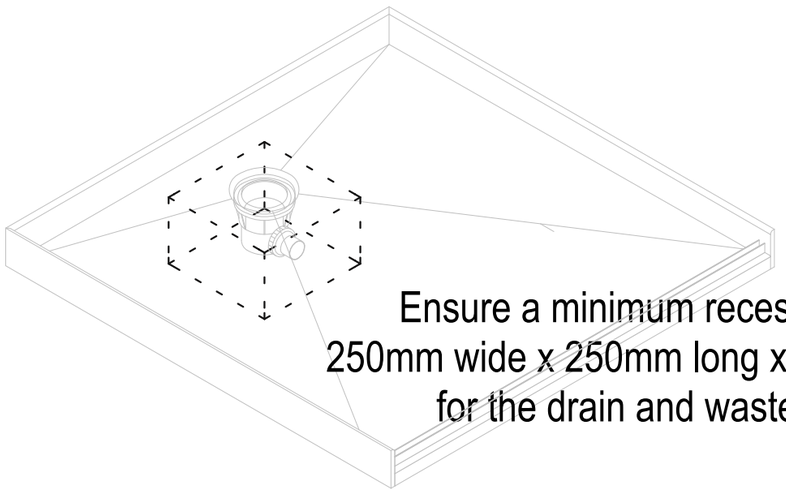

Ensure a minimum recess size of
250mm wide x 250mm long x 150mm deep
for the drain and waste outlet

Base Profile 2 - Timber Floor

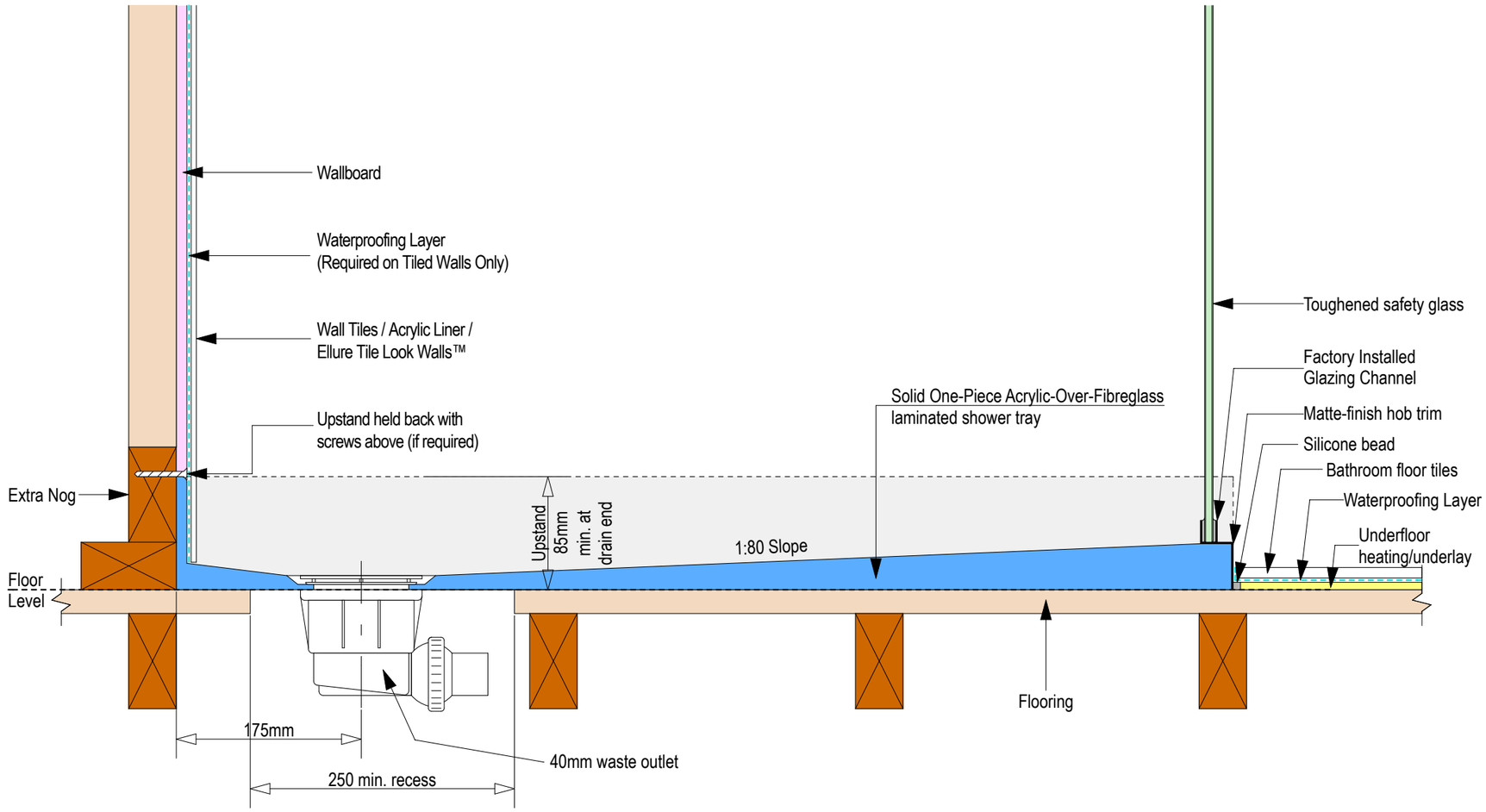

BLACK PEARL™

atlantis

Black Pearl

Base Profile 1 - Concrete Floor

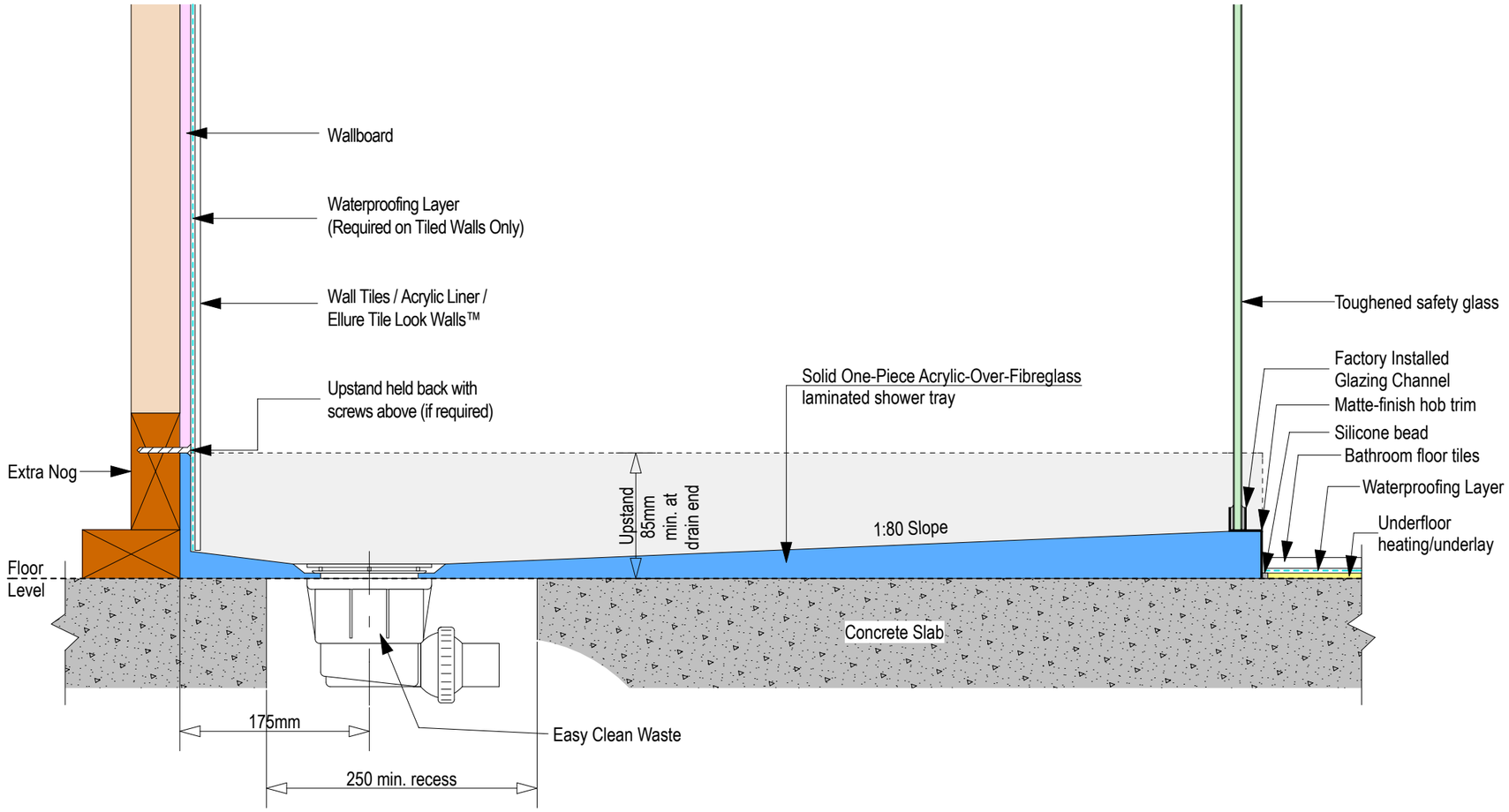

BLACK PEARL™

atlantis
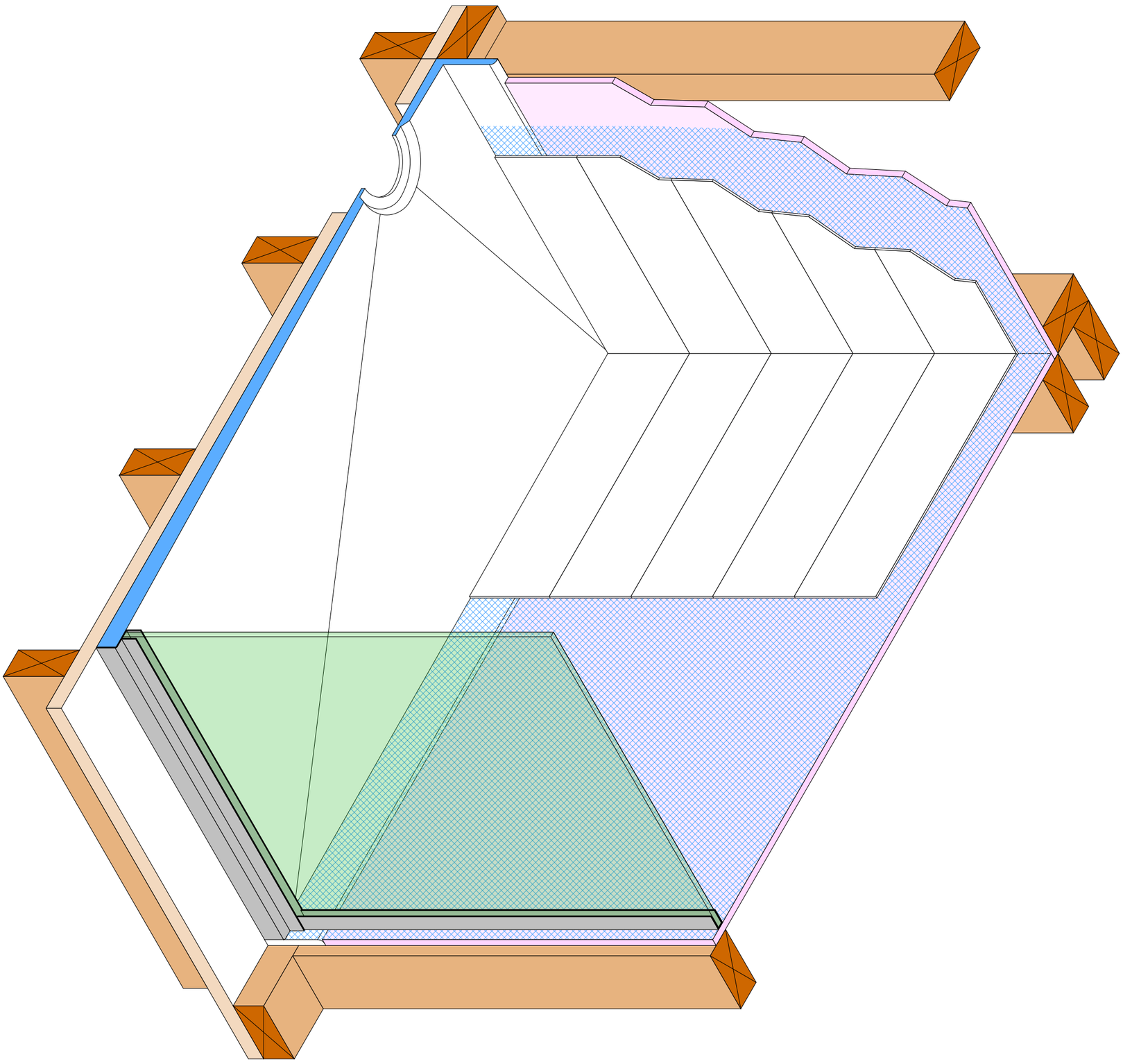
Black Pearl